REVISIONS							
ZONE	LTR.	DESCRIPTION	DATE	ECN	BY	CKD	APVD
–	–	INITIAL RELEASE	10/01/08	–	–	–	–
–	–	ADDED 100K CAPACITY	02/23/10	–	–	–	–

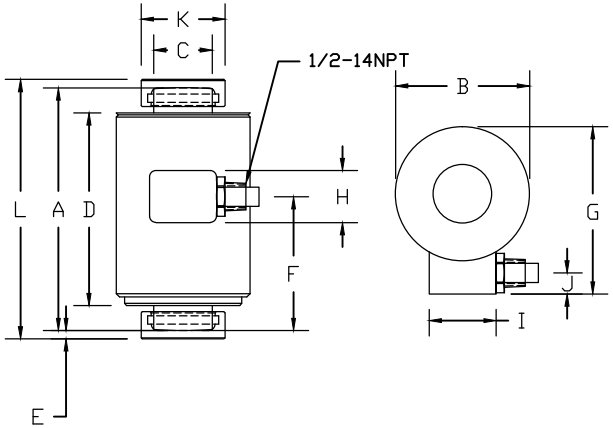

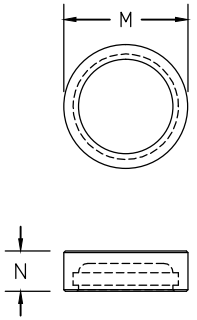

652 Load Caps
(Set of two)

PERFORMANCE SPECIFICATIONS:

1. CAPACITIES: 50K, 100K & 120K LB
2. RATED OUTPUT: 2.00 mV/V
3. SAFE OVERLOAD: 150% FS
4. EXCITATION VOLTAGE: 10-20V AC/DC
5. INPUT RESISTANCE: 1140 ±10 OHMS
6. OUTPUT RESISTANCE: 1050 ±5 OHMS
7. ZERO BALANCE: ±1.00% FS
8. SEAL TYPE: HERMETICALLY SEALED, IP67
9. NON-LINEARITY: ±0.03% FS
10. HYSTERESIS: ±0.02% FS
11. REAPEATABLITY: ±0.01% FS
12. CREEP: ±0.02% FS
13. NTEP RATED
14. CLASS 111 L 10,000 DIVISION, MULTIPLE CELL
15. COMPENSATED TEMPERATURE RANGE: 0°C - +30°C
16. TEMPERATURE EFFECT ON ZERO: ±0.0027%FS/°C
17. TEMPERATURE EFFECT ON OUTPUT: ±0.0015%FS/°C
18. INSULATION RESISTANCE: >5000 MEGOHMS
19. LOAD CELL CABLE: 4 CONDUCTOR BRAIDED, 50 FT
20. LOAD CELL WIRING:
    - GREEN +EXC
    - BLACK -EXC
    - RED +SIG
    - WHITE -SIG
    - BRAID/YELLOW: SHEILD
21. FM APPROVED

RATED CAPACITY	DIMENSIONS													
	A	B	C	D	E	F	G	H	I	J	K	L	M	N
50K-120K Load Cell	7.25	4.00	1.75	5.75	0.75	4.00	5.00	1.55	2.00	0.62	2.50	7.75	–	–
652 Load Caps	–	–	–	–	–	–	–	–	–	–	–	–	2.5	0.82

"DO NOT ALTER WITHOUT AGENCY NOTIFICATION"

THIS DRAWING USES THIRD ANGLE PROJECTION

THIS DOCUMENT CONTAINS PROPRIETARY INFORMATION AND SUCH INFORMATION MAY NOT BE REPRODUCED OR DISCLOSED FOR ANY PURPOSE OR USED TO PRODUCE THE ARTICLE OR SUBJECT WITHOUT WRITTEN PERMISSION FROM COTI GLOBAL SENSORS, INC.

TOLERANCES UNLESS OTHERWISE SPECIFIED
.XX-Ñ01
.XXX-Ñ005
FRACTIONS-Ñ1/16"
ANGLES: Ñ1/2"

APPROVALS		DATE
DRAWN:	DH	02/23/10
CHECKED:	MB	02/23/10
ENGINEER:	DH	02/23/10
APPROVED:	AA	02/23/10

MATERIAL
STAINLESS STEEL

COTI GLOBAL SENSORS, INC.

CG-26S COMPRESSION CANISTER
NTEP LOAD CELL

SCALE	SIZE	PART/DRAWING NO.	REV.
NONE	B	DOD-CG-26S	B

MODEL CG-26S SHEET 1 OF 1